Willrich Precision
Ph 866-9845-5742
email: sales@willrich.com

EH Counter

SERIES 542 — Multi-function Display Unit

FEATURES

- DIN compatible Panel-mounting type and DIN size (144 x 72mm). It can be easily incorporated into each system instrument.
- This counter can be used on a desktop by mounting it on the supplied stand leg.
- The standard RS-232C interface allows easy communication with an external PC.
- The RS Link function permits multiple EH counters (6 units maximum) to be connected with daisy chain and data to be input/output from one channel of the terminal RS-232C interface.
- The maximum value, minimum value, and TIR (runout) measurements are possible.
- The 2-gage input type can perform 2-axis display and make addition or subtraction calculations between 2 gages.

542-075A
EH-101P

542-071A
EH-102P

542-073A
EH-102Z

542-074A
EH-102S

542-072A
EH-102D

SPECIFICATIONS

Model	EH-101P	EH-102P	EH-102Z	EH-102S	EH-102D
Order No.	542-075A	542-071A	542-073A	542-074A	542-072A
Applicable input	2.5MHz (Differential square-wave)			1MHz Differential sine-wave	Digimatic code SPC
Applicable gage	LGK, LGF with scale origin point mark, LGB, LGH (0.1um)		LGF with scale origin point mark, LGF 5um	LGH (0.01um)	LGD, LGS, ID
Number of gage input	1 (Single-display)	2 (Double-display)			
Resolution (Depending on the linear gage type connected)	.000005", .00005", .0005"/ 0.0001mm, 0.0005mm, 0.001mm, 0.005mm, 0.01mm			.000001"/0.1um, 0.01um	.0005" / 0.01mm
Mass	760g	800g	800g	900g	800g
Tolerance judgment display	LED display (3 step: Amber, Green, Red / 5 step: Amber, Amber flash, Green, Red flash, Red)				

DIMENSIONS

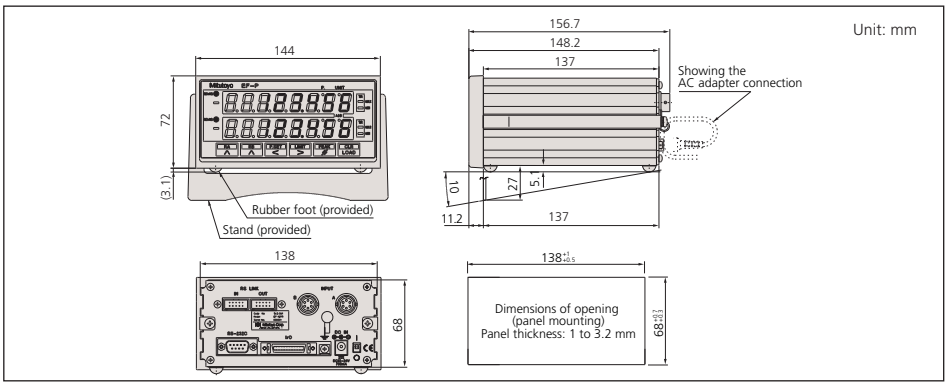

Function

Zeroset, preset, limit setting (3 or 5-step), GO/±NG judgement, GO/±NG signal output, MAX/MIN/TIR (runout) measurement, counting direction switching, double reading, mm/inch switching, sum/difference calculation of 2 gages (542-071A, 542-073A, 542-074A, 542-072A only), output mode selection

Output

I/O: Tolerance judgment output (3/5 stages), normal operation output RS-232C or Digimatic code (selectable): Various measurement data

External Control

I/O: Preset, Data hold and Error clear RS-232C: Displayed value output, MAX/MIN/TIR switching,Zero set, peak value clear, preset value input, tolerance value input and error clear

RS Link

Up to six EH counters may be connected via one RS-232C port.(daisy chain)

Error display/output

Power-supply voltage error, overspeed error, overflow error, gage error, communication error, and tolerance setting error

Power supply: Standard accessory
Via AC adaptor (12 - 24V DC, 700mA (max)

Optional Accessories

02ADB440: I/O output connector
02ADF180: 10-key unit
936937: SPC cable (40"/1m)
965014: SPC cable (80"/2m)
02ADD930: Terminal block connecting cable
02ADN460: AC adapter
02ZAA010: Power cable

02ADB440

02ADN460

02ZAA010